DIMENSIONAL DRAWINGS

POSITIONER WITH MANOMETERS AND SWITCH

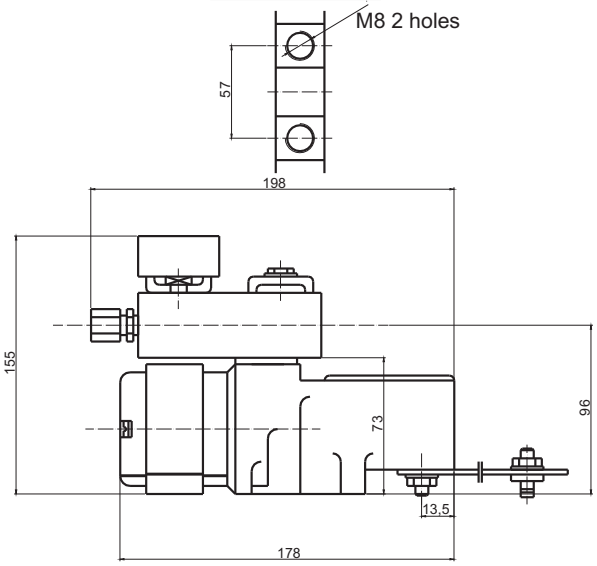

POSITIONER WITHOUT MANOMETERS AND SWITCH

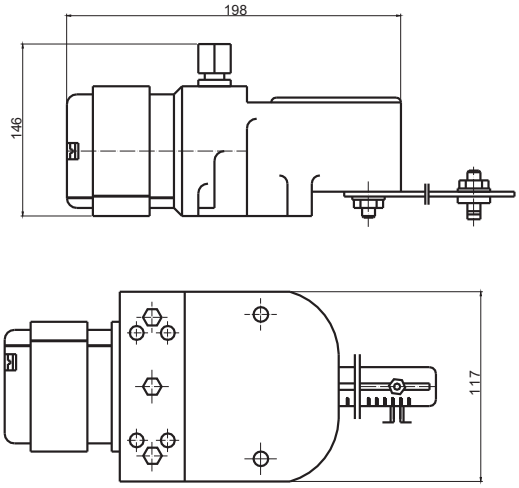

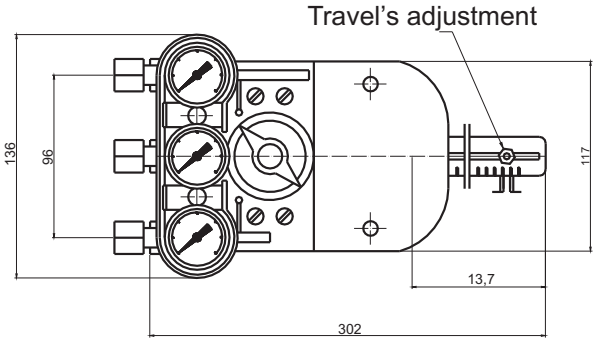

Order example:
Positioner A703, input signal 60… 100 kPa, equipped with manometers and switches, pneumatic connectors for copper pipes ø6 has a designation:
Positioner A703-A009/R971

ORDERING METHOD

A703-A	Pneumatic positioner

CODE1	VERSION
001/	input signal 20… 100 kPa, without manometers and switch
002/	input signal 20… 60 kPa, without manometers and switch
003/	input signal 60… 100 kPa, without manometers and switch
007/	input signal 20… 100 kPa, with manometers and switch
008/	input signal 20… 60 kPa, with manometers and switch
009/	input signal 60… 100 kPa, with manometers and switch

CODE2	PNEUMATIC CONNECTORS
R971	for copper pipes ø6 mm
R972	for copper pipes ø8 mm
R973	for polyethylene pipes ø6 mm

A703-A	**009**	**/**	**R971**	EXEMPLARY POSITIONER TYPE

1. Positioners in the basic version A703-A001…A009 are equipped with L cam (linear) and parts kit for installation on the yoke actuators, for example: type 37 or 38 from Polna S.A.
2. Positioners at accelerating and decelerating characteristic are made on special order
- please agree this with Aplisens consultant.

We reserve the right to implement the product structural changes without the parameters deterioration.